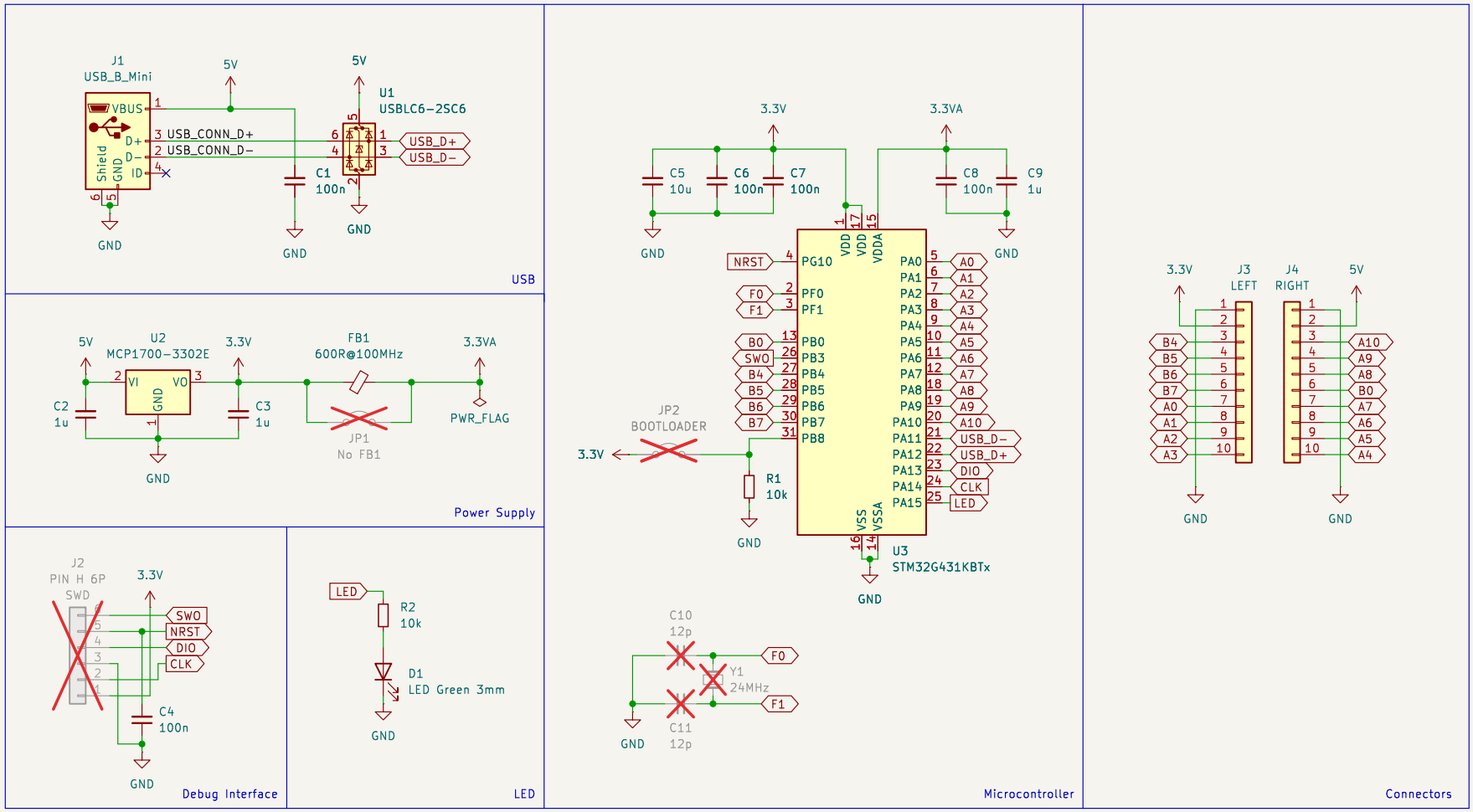

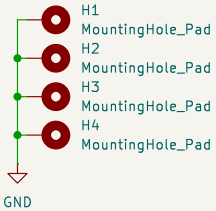

Designed by: Rafael G. Martins
Released under CERN Open Hardware Licence Version 2 – Strongly Reciprocal

Sheet: /
File: stm32g4−usbd−devboard.kicad_sch

Title: stm32g4−usbd−devboard

Size: A4	Date: 2025−04−02	**Rev: 20250402**
KiCad E.D.A. 9.0.6		Id: 1/1